MACHINE	
SIZE	TYPE

SPECIFY WHEN ORDERING

DENVER EQUIPMENT 24 HOUR SERVICE COMPANY

IMPORTANT NOTICE
CLEARANCE BETWEEN STATIONARY WEARING PLATE AND REVOLVING IMPELLER BLADE MUST BE MAINTAINED AT LESS THAN 1/4" AND PREFERABLY AT 1/8"

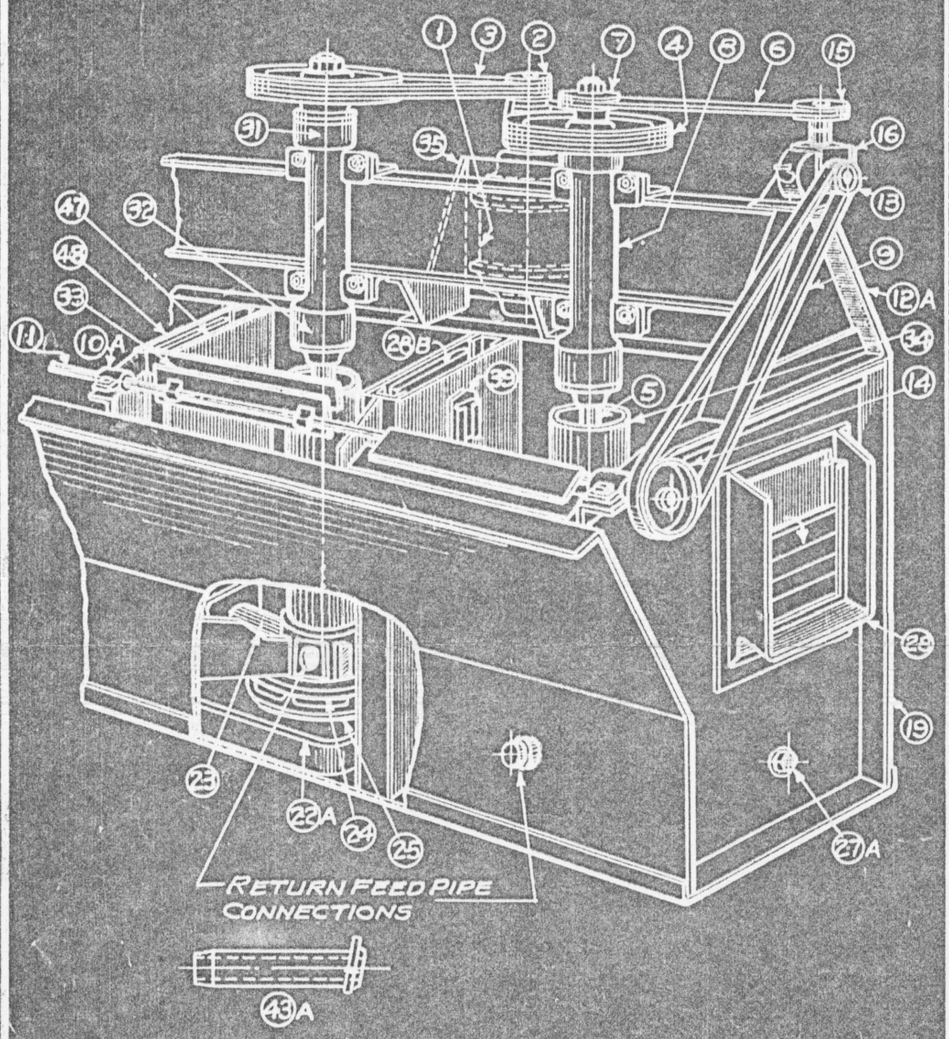

1	MOTOR
2	MOTOR SHEAVE
3	V-BELTS
4	IMPELLER SHEAVE
5	IMPELLER SHAFT
6	PADDLE DRIVE V-BELT
7	COMBINATION NUT & SHEAVE
8	SPINDLE BEARING
9	PADDLE SHAFT FLAT BELT
10	A. PADDLE SHAFT BEARING
11	PADDLE SHAFT
12	A A-FRAME
13	REDUCER OUTPUT FLAT PULLEY
14	PADDLE SHAFT FLAT PULLEY
15	REDUCER V-BELT SHEAVE
16	SPEED REDUCER
19	TANK (WOOD OR STEEL)
22	A. C.I. CELL PAN
23	HOOD (FEED HALF)
23	A. HOOD (SMALL HALF)
23	B. HOOD (1-PIECE)
24	RUBBER WEARING PLATE
24	A. H.I. WEARING PLATE
25	RUBBER IMPELLER
25	A. H.I. IMPELLER
27	A. SAND RELIEF FITTINGS
28	DISCHARGE WEIR CASTING
28	B. WEIR CASTING. (LESS LIP)
31	UPPER BALL BEARING
32	LOWER BALL BEARING
33	FROTH PADDLE COMPLETE
34	STANDPIPE
35	MOTOR BRACKET
39	RECIRCULATION GATE
43	A. RETURN FEED PIPE
47	FEED PLATE
48	WEIR PLATE

SEE A-1192 FOR WOOD TANK

This print loaned subject to return upon demand and under the express condition that it is not to be used, directly or indirectly, detrimental to Denver Equipment Co.

PRINTED JAN 30 1948

ORDER NO. Z-31

DENVER EQUIPMENT CO.
1419 17th Street — Denver, Colorado

PART LIST DENVER SUB-A FLOTATION MACHINE
MOTOR DRIVEN, ECONOMY TYPE

DRAWN BY CV 6-26-36
CHECKED BY

SCALE

A-1257

NM Mine File No. 2622